— PROPRIETARY —
THIS DOCUMENT CONTAINS CONFIDENTIAL, PROPRIETARY INFORMATION THAT IS FOX PROPERTY. DO NOT DISCLOSE TO OR DUPLICATE FOR OTHERS EXCEPT AS AUTHORIZED BY FOX.

PARALLEL REZI

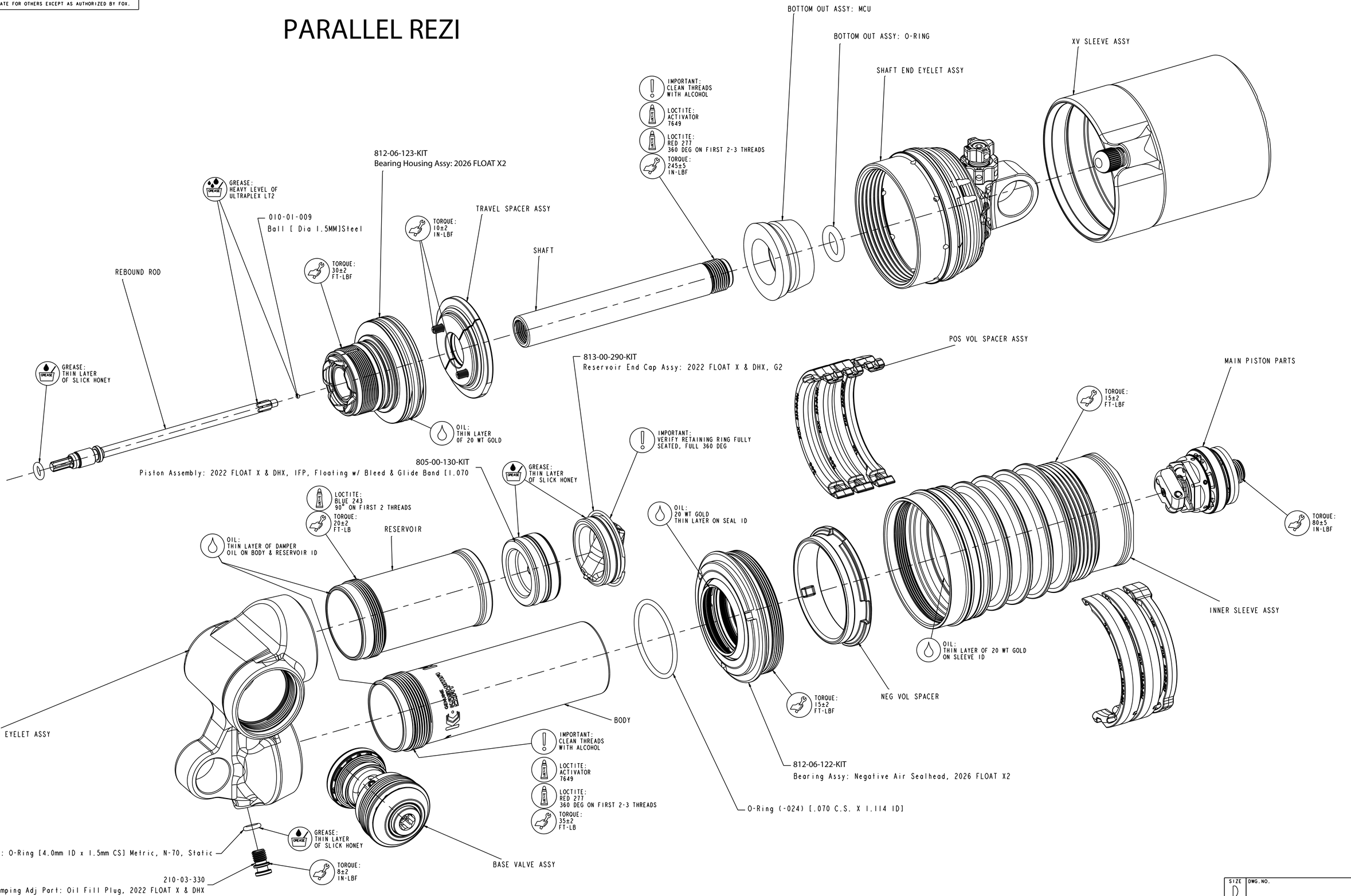

SIZE	DWG. NO.	REV
D		A
PLOT SCALE: 1.5:1		SHEET: 3 OF 4